R4 Rev Limiter - Installation Instructions

RL-2014-CNTRL-WH4

Parts Included	Quantity
Rev Limiter Control Unit and Cover	1
Screws for Control Unit Cover	4
Wire Harness & Strain Relief Assembly Installed	1

After you have installed the Valve as described in the Valve Installation Instructions, install the Rev Limiter Electrical Kit as detailed on the following pages:

- Install the Control Unit
- Set the Rev Limiter
- Test the Rev Limiter Setting
- Turning key off will disable RPM pulse, making the system manual activation if your pulse is taken from an OEM source.

Headwind Solutions
1.844.304.7277
www.headwindsolutions.ca

Step 1: Electrical Installation

1. **DISCONNECT BATTERIES**
2. Mount the Control Unit Box on the firewall of the engine compartment away from moving parts and heat sources so that it is accessible for set up and testing. Do not tighten the Strain Relief Nut (#3) until after wiring is complete. The Strain Relief (#2) can accommodate up to six 14GA wires. When tightened, it keeps out moisture and prevents wires from being pulled out.

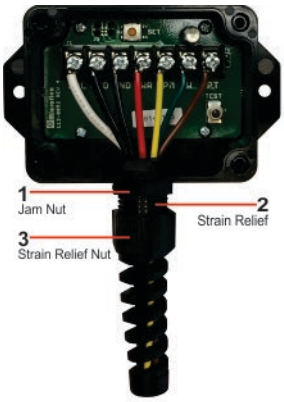

3. Connect ground (black) wire and power (red) wire directly to the battery. Install supplied auto reset breaker (no fuses) in the power supply wire (red). Use crimp style heat shrink connectors only.

DO NOT CONNECT WIRES TO FACTORY FUSE PANEL. CONNECT POWER AND GROUND WIRES DIRECTLY TO BATTERY. IMPROPER CONNECTIONS WILL VOID WARRANTY.

3. Connect the green wire to the toggle switch and GROUND the other side of the switch to the battery.
4. Connect the harness as per the included wiring diagram using crimp style heat shrink connectors only.
5. Pulse pickup locations
   –for light trucks see our website (under SUPPORT) for the chart of pulse locations. Supplied 68k resistor may be required if signal source is inadequate.
   –for heavy trucks, equipment and industrial equipment use a magnetic sensor mounted in the flywheel housing.
   -the alternator "R" (rectifier) terminal may be used but is NOT RECOMMENDED. The supplied 330K resistor should be installed if alternator signal is inadequate.
6. **RECONNECT BATTERIES AND TIGHTEN STRAIN RELIEF.**

Control Unit: Set Button and LED Light

Step 2: Set the Rev Limiter (RPM Upper Limit)

Set the Rev Limiter for one of the following, as described below:

- ☐ Variable Throttle
- ☐ Work or Pump Mode
- ☐ Constant Throttle

Setting the Rev Limiter for a Variable Throttle

We recommend setting the shutdown RPM to a minimum of 20% above factory/OEM redline.

1. Turn the ignition key to the **ON** position, but **do not** start the engine.
2. On the Control Unit, press the **SET** button once. The **GREEN** LED will illuminate.
3. Start the engine.
4. Raise the engine RPM to ½ (50%) of the desired shutoff RPM. While holding the RPM steady, push the **SET** button again until the **GREEN** LED flashes three (3) times.
5. Install the Control Unit cover. Setup is now complete.
   NOTE: The **RED** LED will strobe if no signal is detected. If so, check termination points and all connections, and then repeat the above steps.

Setting the Rev Limiter for Work Mode

This should only be set for Work Mode but can be used in conjunction with a variable throttle.

1. Turn the ignition key to the **ON** position, but do not start the engine.
2. Close the Work Mode Switch (e.g. PTO switch or park brake button).
3. On the Control Unit, press the **SET** button once. The **GREEN** LED will illuminate.
4. Start the engine.
5. Raise the engine RPM to ½ (50%) of the desired shutoff RPM.
   While holding the engine RPM steady, press the **SET** button again until the **GREEN** LED flashes three (3) times.
6. Install the Control Unit cover. Setup is now complete.
   NOTE: The **RED** LED will strobe if no signal is detected. If so, check termination points and all connections, and then repeat the above steps.

Setting the Rev Limiter for a Constant Throttle (Welders, Generators, Compressors, etc.)

1. On the Control Unit, press and hold the **SET** button until the **GREEN** LED strobes. Release the button.
2. Start the engine and allow the RPM to level off at the maximum work speed.
3. Push the **SET** button again. The **GREEN** LED will flash three (3) times.
4. Install the Control Unit cover. Setup is now complete.
   NOTE: The **RED** LED will strobe if no signal is detected. If so, check the termination points and all connections, and then repeat the above steps.

Step 3: Test the Rev Limiter Setting

Testing the Setting for a Variable Throttle

1. Start the engine.
2. On the Control Unit, press the **TEST** button once.
   The **RED** LED will illuminate.
3. Throttle up the engine. The Solenoid on the Valve will actuate seven times at the setting you made in the previous section. This is normal operation.
4. Reset the Valve by turning the blue knob on it 90 degrees clockwise until it locks into position.

Control Unit: LED and Test Button

Testing the Setting for a Constant Throttle

1. On the Control Unit, press the **TEST** button once. The **RED** LED will illuminate.
2. Start the engine. As the engine RPM rises, the Solenoid on the Valve will actuate seven times at 60% of the work-mode RPM.

Installation and testing are now complete.
Thank you choosing SHOCKER brand products.

See other side for wiring diagram

Wiring Diagram
RL-2013-RL

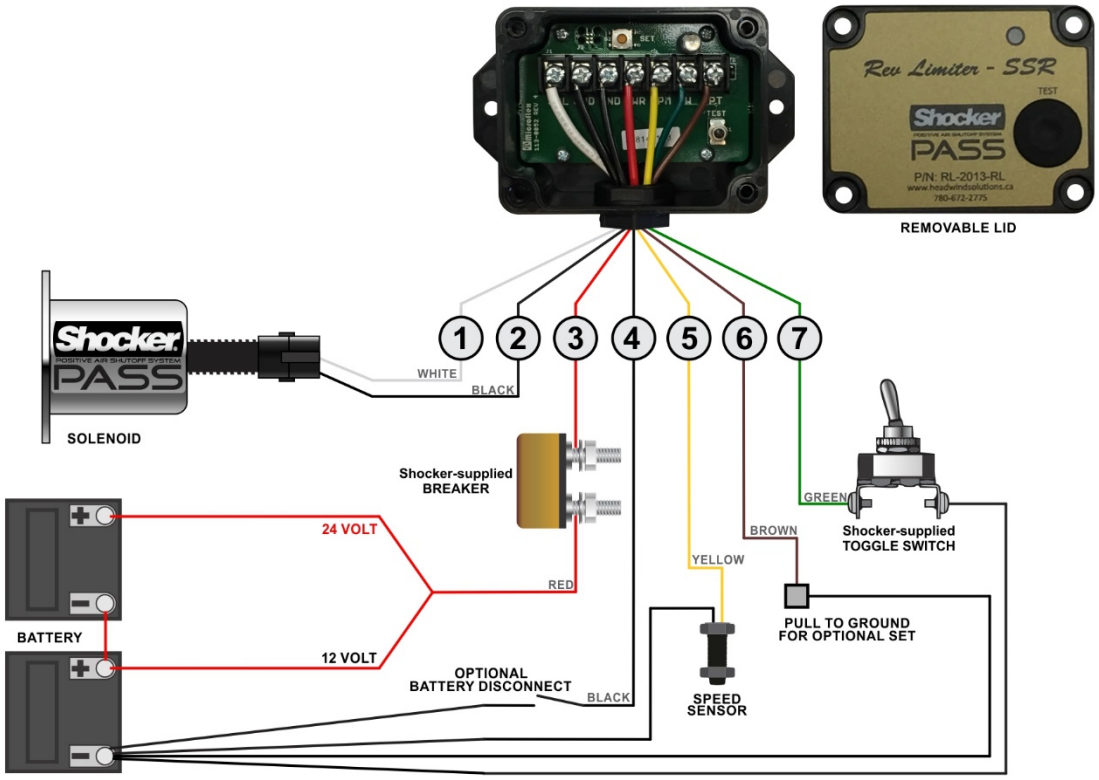

Use crimp-type heat shrink connectors. Power and ground MUST be run DIRECTLY to the battery with a minimum of 12 gauge wire. Improper grounding WILL cause damage to the component, voiding warranty.

Pin	Use	AWG #	Color
1	Solenoid Pull-In	12	White
2	Solenoid Ground	12	Black
3	12-24 V Battery Power (+)	12	Red
4	Battery Ground	12	Black
5	RPM/Pulse Source	16	Yellow
6	Work Mode Lead Switch	16	Brown
7	Manual Switch	16	Green

WIRE SIZE RECOMMENDATION TABLE Maximum lead length (in feet)					
	14 GA	12 GA	10 GA	8 GA	6 GA
12 V DC	9.5	15	24	38	60
24 V DC	38	60	96	150	240

IMPROPER GROUNDING OR REMOVAL OF DELPHI PLUG CAN CAUSE DAMAGE TO COMPONENTS, VOIDING WARRANTY

CONNECTORS MUST BE RATED 25 AMP MINIMUM.
DO NOT USE: DEUTSCH DT,DTM,DTMH,DTMN.

Headwind Solutions warrants the components of this device for a period of two (2) years from the date of purchase. The customer is responsible for the correct installation, setup and testing of the product, including: a) the location of all components; b) correct wiring connections and wire gauge; c) correct setup and testing of the installed product. This warranty is void if the product is incorrectly installed, set up or tested.

Toll Free: 1-844-304-7277
www.headwindsolutions.ca
V1.01/25 Oct. 2019